California Faucets®

# Capitola™

## Ceiling Shower Arm

**9116-87-4**
**9116-87-6**
**9116-87-12**
**9116-87-18**
**9116-87-24**
**9116-87-30**

## Features

- *25+ artisan finishes including 10+ PVD finishes*
- *All brass construction*
- *Includes adjustable flange*

*9116-87-4 shown*

## Codes/Standards Applicable

Product meets or exceeds the following:

- *ASME A112.18.1/CSA B125.1*

| SKU | A" [mm] |
|---|---|
| 9116-87-4 | 4" [102] |
| 9116-87-6 | 6" [152] |
| 9116-87-12 | 12" [305] |
| 9116-87-18 | 18" [457] |
| 9116-87-24 | 24" [610] |
| 9116-87-30 | 30" [762] |

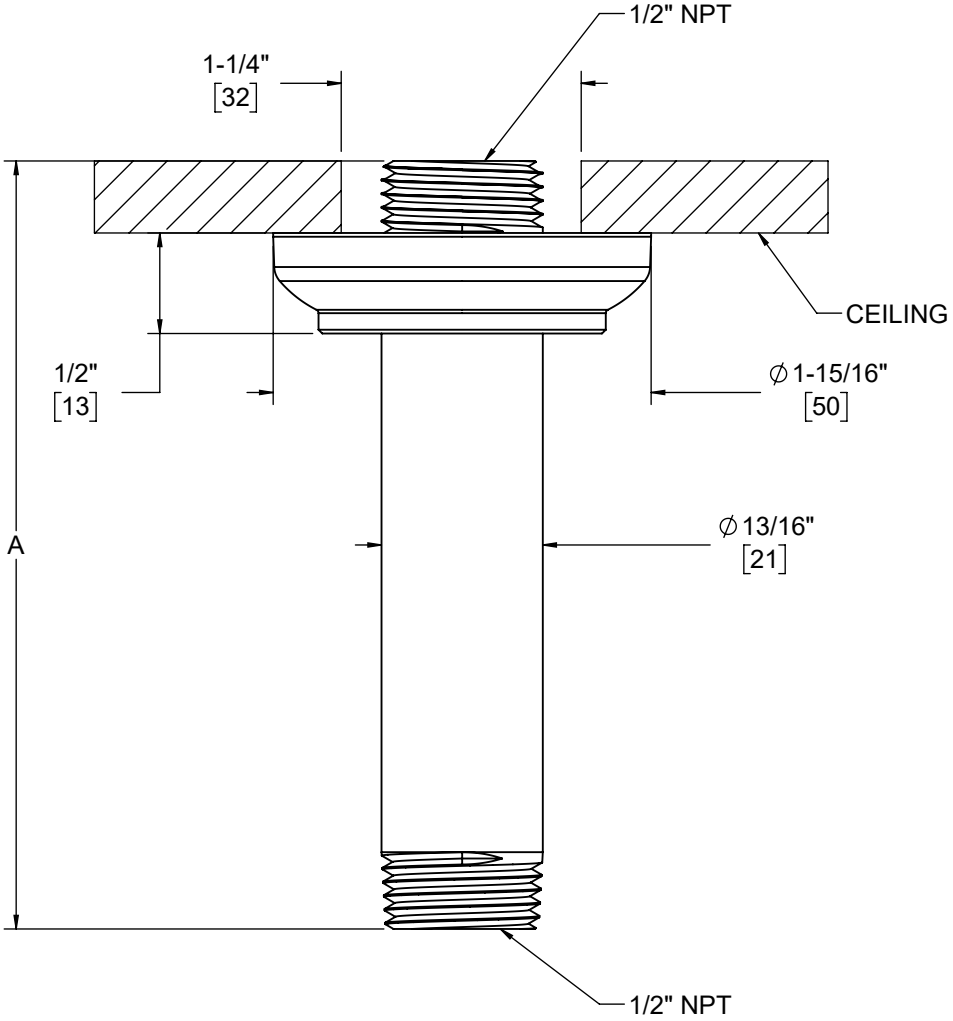


| Through-Hole Specifications | Min | Recommended |
|---|---|---|
| Shower: | ∅13/16" [21] | ∅1-1/4" [32] |

Dimensions are inches, rounded to 1/16"
[Dimensions in brackets are mm, rounded to 1mm]

Specifications subject to change without notice