California Faucets®

Spare Parts Diagram

Descanso®

Handle Tub and/or Shower Trim Only

TO-3006L TO-30-W
TO-3006FL TO-30F-W
TO-3006KL TO-30K-W
TO-3006TL TO-30T-W
TO-3006XL TO-30X-W
TO-3006XFL TO-30XF-W
TO-3006XKL TO-30XK-W
TO-3006XTL TO-30XT-W

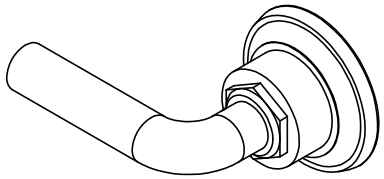

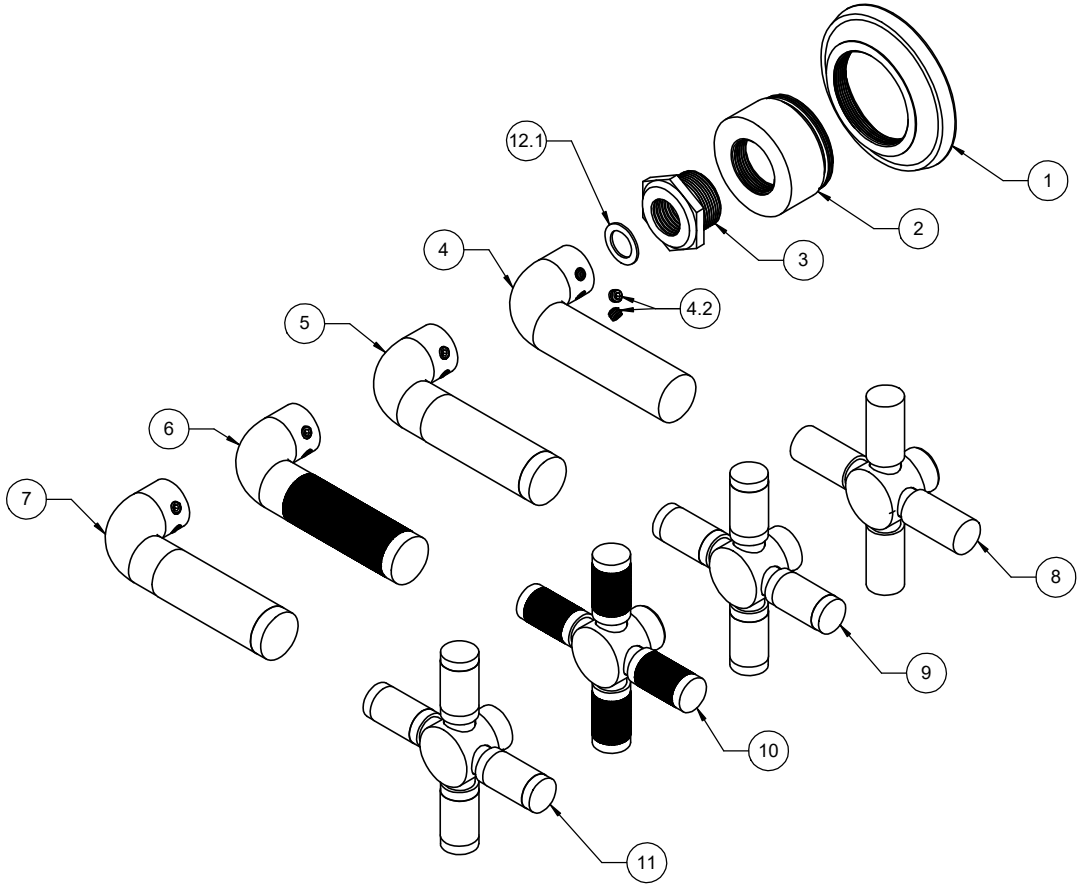

To order spare parts add and/or replace as stated below:

SPD- prefix added to part number(s)
-ZZ replaced with finish code (see finish table)
-WW replaced with **-90** (light finish) or **-96** (dark finish)

Ex: **SPD-**7-100278**-PC** or **SPD-**86030**-96**

	ITEM	PART NO.	DESCRIPTION	QTY.
	1	10363-ZZ	RING, BASE, TRAD	2
	2	10751-ZZ	ESCUTCHEON, SCALLOPED	2
	3	10760-ZZ	NUT, SCALLOPED ESCUTCHEON	2
for 30 series	4	7-100146-ZZ	ASM, LEVER, 74 SERIES "BROACHED" *(incl. 4.2)*	2
	4.2	86030-WW	SETSCREW 8-32 X 1/8 SCKT HD CUP PT SS	2
for 30F series	5	7-100277-ZZ	ASM, CARBON FIBER LEVER *(incl. 4.2)*	2
for 30K series	6	7-100271-ZZ	ASM, KNURLED LEVER *(incl. 4.2)*	2
for 30T series	7	7-100564-ZZ	ASM, INDUSTRIAL HDL TEAK *(incl. 4.2)*	2
for 30X series	8	7-100291-ZZ	ASM, INDUSTRIAL X-HDL SMOOTH *(incl. 4.2)*	2
for 30XF series	9	7-100292-ZZ	ASM, INDUSTRIAL X-HDL CARBON FIBER *(incl. 4.2)*	2
for 30XK series	10	7-100293-ZZ	ASM, INDUSTRIAL X-HDL KNURLED *(incl. 4.2)*	2
for 30XT series	11	7-100565-ZZ	ASM, INDUSTRIAL X-HDL TEAK *(incl. 4.2)*	2
	12.1	87340-81	WSHR Ø.590" X Ø.390" X .030" BLK UHMW	2
for ITEM 4.2	13	882042-99	KEY, ALLEN, 5/64", BLACK	1

CC I am approving this document