California Faucets®

Spare Parts Diagram

Trousdale™

Widespread Lavatory Faucet

C102
C102X
C102XS

A REQUIRES ITEM 3
B REQUIRES ITEM 14

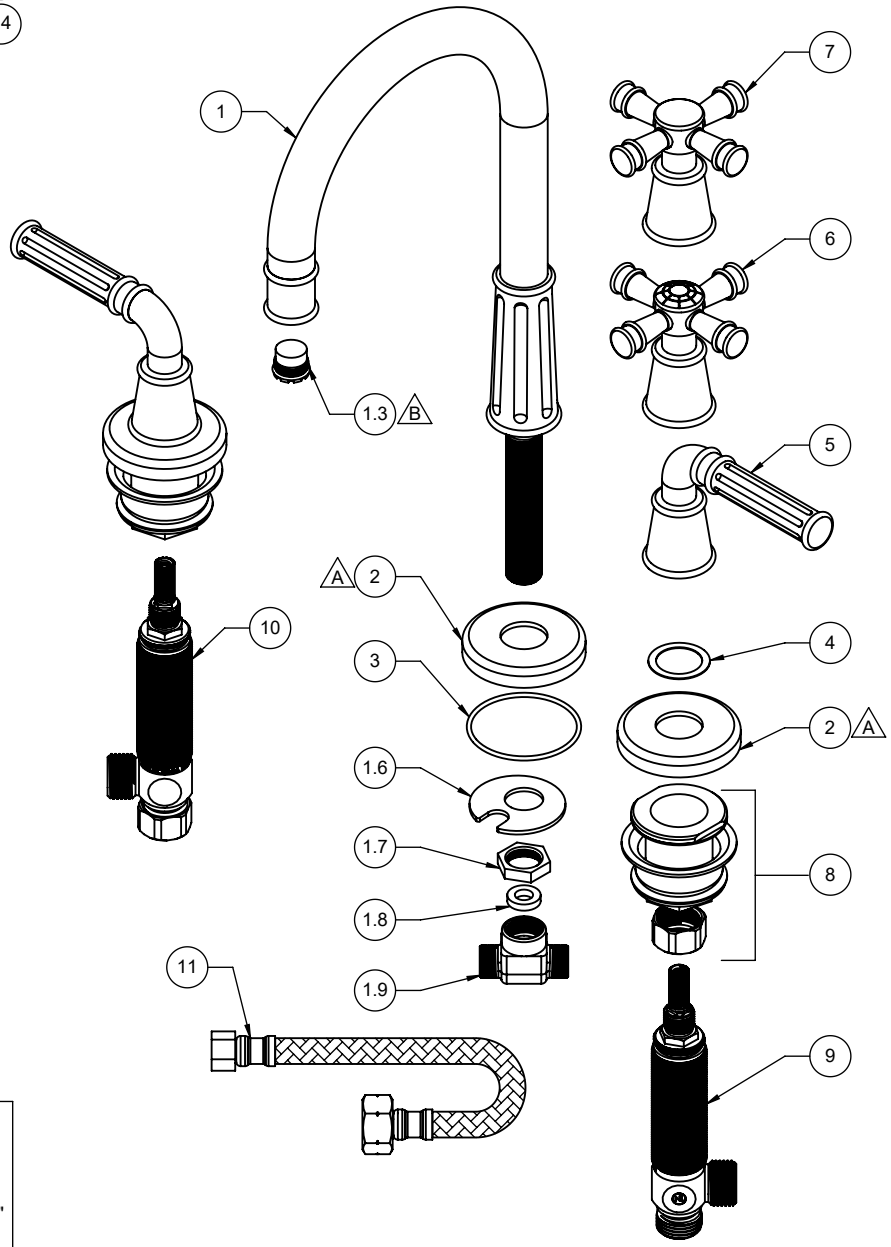

CART-WS-LTC
"left turn close"

CART-WS-RTC
"right turn close"

SPD- prefix not required

To order spare parts add and/or replace as stated below:

SPD- prefix added to part number(s)
-ZZ replaced with finish code (see finish table)
-WW replaced with **-90** (light finish) or **-96** (dark finish)

Ex: **SPD-**7-100362**-PC** or **SPD-**86030**-96**

	ITEM	PART NO.	DESCRIPTION	QTY.
	1	7-100362-ZZ	ASM, LAV SPOUT, C1 FLUTED *(incl. 1.3, 1.6, 1.7, 1.8, 1.9)*	1
	1.3	880356-81	INSERT, 1.2 GPM, TT LAMINAR (CACHE)	1
	1.6	881766-99	WSHR HORSESHOE	1
	1.7	881276-99	NUT, HEX 3/8"-18 NPSM X .20 HT	1
	1.8	87162-80	WSHR Ø8.5 X Ø15.5 X 3.5MM EPDM A70 (NSF-61-12 & WRAS)	1
	1.9	880083-90	TEE, 3-WAY LAV - SS	1
	2	10990-ZZ	RING, Ø22.0MM ID BASE, R3.0MM	3
	3	87263-80	O-RING Ø49.00 X 2.00 (NA) BUNA-N A70	3
	4	87191-81	WSHR Ø21.46 X Ø28.58 X 0.508MM UHMW	2
for C1 series	5	7-100416-ZZ	ASM, C1 THREADED LEVER HDL	2
for C1X series	6	7-100418-ZZ	ASM, C1 THREADED X-HDL	2
for C1XS series	7	7-100537-ZZ	ASM, C1 THREADED X-HDL - SMOOTH	2
	8	6-200294	KIT, W/S INV NUT - 2 SETS (1 SET = 6-200294-1)	1
	9	6-200087	ASM, COLD-LAV "NL" BODY & CART (.25 Pb)-G4 *(incl. CART-WS-LTC)*	1
	10	6-200088	ASM, HOT-LAV "NL" BODY, CART (.25 Pb)-G4 *(incl. CART-WS-RTC)*	1
	11	880099-99	HOSE, POLY BRAIDED, 1/2 IPS X 3/8 CMP X 12 (DN6-SILICONE) (NL, NSF-61-12 & WRAS)	2
	14	223472-99	KEY, TT CACHE AERATOR INSERT	1